Current part is item (30,6) on diagram. Available at www.oshkoshequipment.com

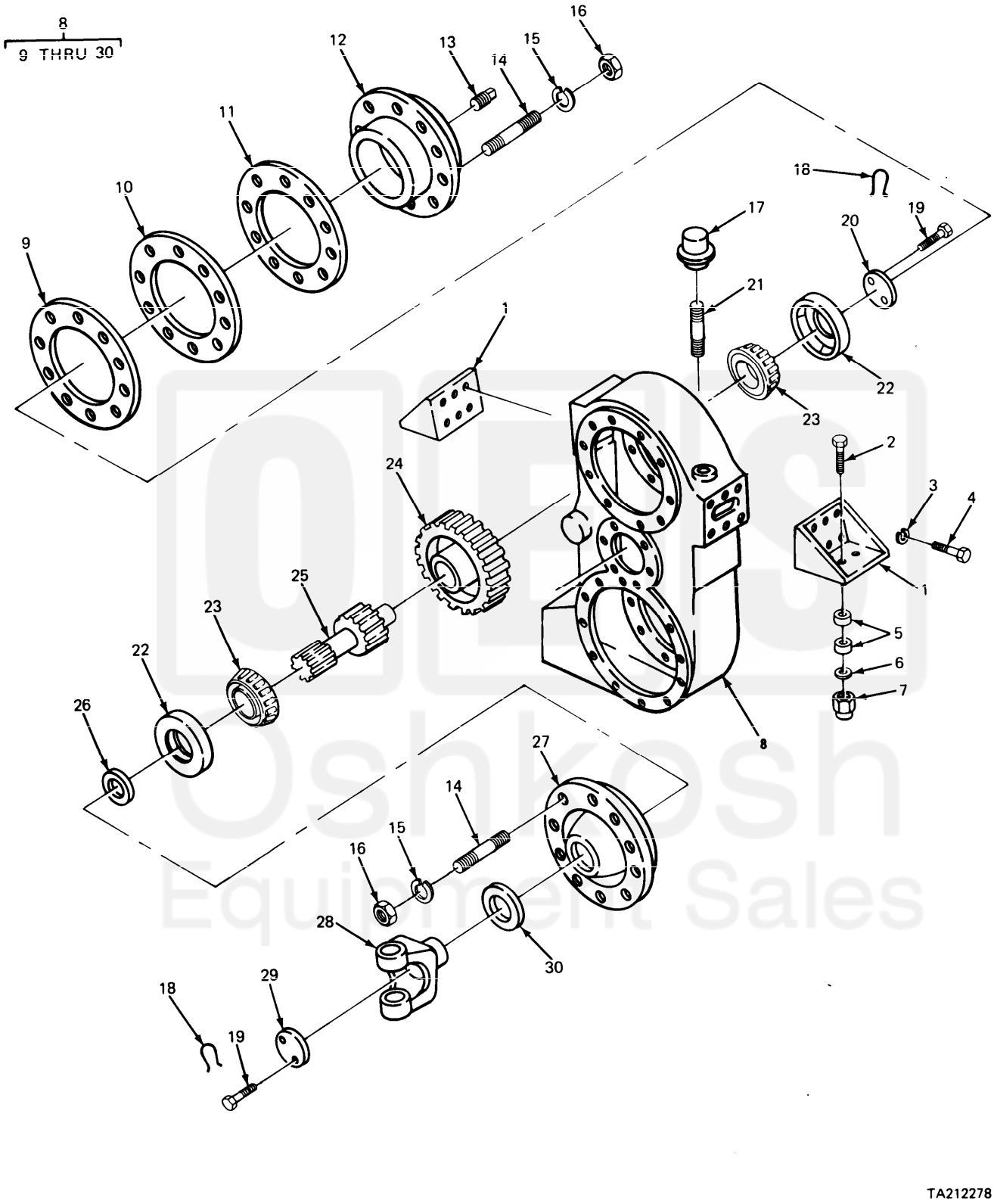

FIGURE 137. TRANSFER CASE AND RELATED PARTS.

Current part is item (30,6) on diagram. Available at www.oshkoshequipment.com

Current part is item (30,6) on diagram. Available at www.oshkoshequipment.com

(1) ITEM NO.	(2) SMR CODE	(3) FSCM	(4) PART NUMBER	(5) DESCRIPTION AND USABLE ON CODE (UOC)	(6) QTY
				GROUP 08 TRANSFER AND FINAL DRIVE ASSEMBLIES	
				GROUP 0801 POWER TRANSFER AND FINAL DRIVE ASSEMBLIES	
				FIG. 137 TRANSFER CASE AND RELATED PARTS.	
1	PAFZZ	45152	64573CX-W	BRACKET,ANGLE TRANSFER ASSEMBLY MOUNTING	2
2	PAFZZ	45152	2CH17	SCREW,CAP,HEXAGON H TRANSFER CASE	4
3	PAFZZ	45152	318B	WASHER,LOCK TRANSFER CASE	12
4	PAFZZ	45152	2630H	SCREW,CAP,HEXAGON H TRANSFER CASE	12
5	PAFZZ	45152	18308FX1	MOUNT,RESILIENT TRANSFER CASE	8
6	PAFZZ	45152	15978F	WASHER,SPECIAL TRANSFER CASE	4
7	PAFZZ	45152	2881HX	NUT,SELF-LOCKING,HE TRANSFER CASE	4
8	PAFFH	45152	63724R X-U	TRANSFER TRANSMISSI	1
9	PAFZZ	45152	63978-BX	SHIM TRANSFER CASE	3
10	PAFZZ	45152	63979-BX	SPACER,PLATE TRANSFER CASE	3
11	PAFZZ	45152	63980-BX	SHIM TRANSFER CASE	3
12	PAFZZ	45152	63961DX	HOUSING,TRANSFER CA INPUT,REAR, TRANSFER CASE	1
13	PAFZZ	96906	MS20913-6S	PLUG,PIPE TRANSFER CASE	2
14	PFFZZ	45152	17779FX	STUD,PLAIN REAR INPUT COVER, TRANSFER CASE	20
15	PAFZZ	45152	318BX	WASHER,LOCK	20
16	PAFZZ	45152	432-A-1	NUT,PLAIN,HEXAGON TRANSFER CASE	20
17	PAFZZ	18265	BA S00-0054	BREATHER TRANSFER CASE	1
18	MFFZZ	45152	25806A X-01	WIRE LOCK,TRANSFER CASE MAKE FROM RING,P/N 25806AX	2
19	PAFZZ	96906	MS90727-113	SCREW,CAP,HEXAGON H TRANSFER CASE	4
20	PAFZZ	45152	63967AX	PLATE RETAINER,TRANSFER CASE	1
21	PAFZZ	96906	MS51953-103	NIPPLE,PIPE TRANSFER CASE	1
22	PAFZZ	60038	572	CUP,TAPERED ROLLER INTERMEDIATE SHAFT CONE AND ROLLER	2
23	PAFZZ	60038	575	CONE AND ROLLERS,TA INTERMEDIATE SHAFT,TRANSFER CASE	2
24	PAFZZ	45152	63677CX	GEAR,SPUR TRANSFER CASE	1
25	PAFZZ	45152	63982DX	SHAFT,SHOULDERED DRIVE	1
26	PAFZZ	45152	63981AX	SPACER,RING TRANSFER CASE	1
27	PAFZZ	45152	63800DX	HOUSING,TRANSFER CA INPUT,FRONT, TRANSFER CASE	1
28	PAFZZ	72447	8-4-861	YOKE,UNIVERSAL JOIN INPUT, TRANSFER CASE	1
29	PAFZZ	45152	63974AX	PLATE,RETAINING,BEA RETAINER,YOKE, TRANSFER CASE	1
30	PAFZZ	19207	7963626	SEAL,PLAIN ENCASED	1
				END OF FIGURE	

Current part is item (30,6) on diagram. Available at www.oshkoshequipment.com

Current part is item (30,6) on diagram. Available at www.oshkoshequipment.com

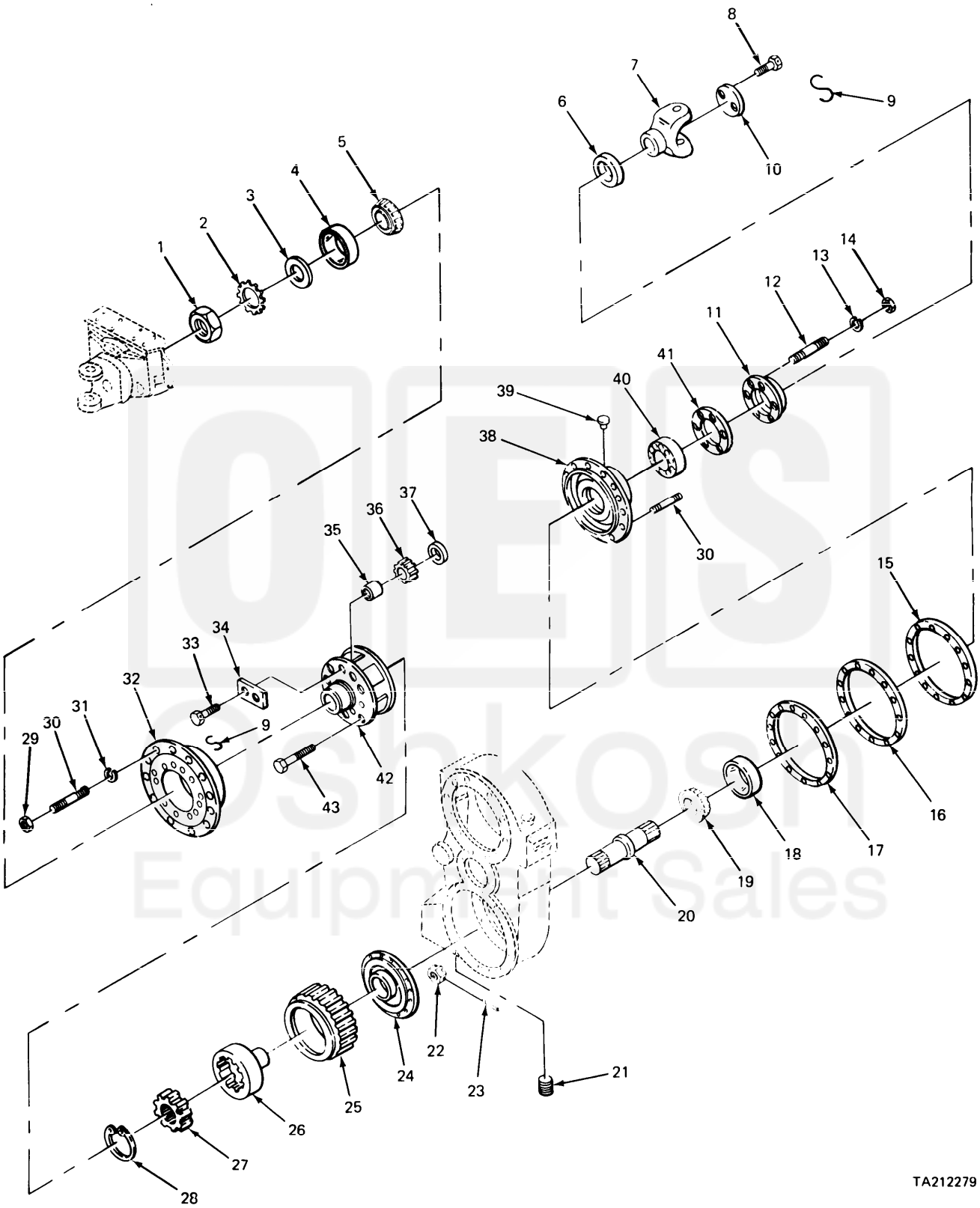

FIGURE 139. TRANSFER CASE FRONT OUTPUT SHAFT AND RELATED PARTS.

Current part is item (30,6) on diagram. Available at www.oshkoshequipment.com

Current part is item (30,6) on diagram. Available at www.oshkoshequipment.com

(1) ITEM NO.	(2) SMR CODE	(3) FSCM	(4) PART NUMBER	(5) DESCRIPTION AND USABLE ON CODE (UOC)	(6) QTY
				GROUP 0801 POWER TRANSFER AND FINAL DRIVE ASSEMBLIES	
				FIG. 139 TRANSFER CASE FRONT OUTPUT SHAFT AND RELATED PARTS.	
1	PAFZZ	45152	8283GX	RING,EXTERNALLY THR PLANETARY CARRIER,TRANSFER CASE	1
2	PAFZZ	45152	8284GX	WASHER,KEY PLANETARY CARRIER, TRANSFER CASE	1
3	PAFZZ	45152	64879BX	SHIELD,BEARING,REPL PLANETARY BEARING	1
4	PAFZZ	60038	48220	CUP,TAPERED ROLLER TRANSFER CASE	1
5	PAFZZ	60038	48282	CONE AND ROLLERS,TA TRANSFER CASE	1
6	PAFZZ	19207	7963626	SEAL,PLAIN ENCASED LOWER REAR OUTPUT SHAFT	1
7	PAFZZ	72447	6-1/2-4-2751	YOKE,UNIVERSAL JOIN TRANSFER CASE REAR OUTPUT	1
8	PAFZZ	96906	MS90727-113	SCREW,CAP,HEXAGON H TRANSFER CASE	2
9	MFFZZ	45152	25806AX-03	WIRE LOCK MAKE FROM RING,P/N 25806AX	4
10	PAFZZ	45152	63974AX	PLATE,RETAINING,BEA RETAINER, YOKE,TRANSFER CASE	1
11	PAFZZ	45152	64461CX	HOUSING,BEARING UNI DIFFERENTIAL, TRANSFER CASE	1
12	PAFZZ	45152	5394GX	STUD,CONTINUOUS THR FRONT AND REAR COVERS,TRANSFER CASE	6
13	PAFZZ	96906	MS35338-46	WASHER,LOCK TRANSFER CASE	6
14	PAFZZ	45152	373-A	NUT,PLAIN,HEXAGON TRANSFER CASE	6
15	PAFZZ	45152	64998-BX	SPACER,PLATE TRANSFER CASE	3
16	PAFZZ	45152	64997-BX	SHIM TRANSFER CASE	3
17	PAFZZ	45152	64996-BX	SHIM TRANSFER CASE	3
18	PAFZZ	60038	JHM720210	CUP,TAPERED ROLLER BEARING(LOWER REAR OUTPUT SHAFT)	1
19	PAFZZ	60038	JHM720249	CONE AND ROLLERS,TA (LOWER REAR OUTPUT SHAFT)TRANSFER CASE	1
20	PAFZZ	45152	64136CX	SHAFT,SHOULDERED BOTTOM REAR	1
21	PAFZZ	96906	MS49006-12	PLUG,PIPE,MAGNETIC DRAIN	1
22	PAFZZ	45152	119504-A	NUT,SELF-LOCKING,EX TRANSFER CASE	13
23	PAFZZ	96906	MS24665-357	PIN,COTTER YOKE PIN	13
24	PFFZZ	45152	64877DX	CASE,PLANETARY PLANETARY,TRANSFER CASE	1
25	PAFZZ	45152	63678CX	GEAR,SPUR TRANSFER CASE	1
26	PAFZZ	45152	8035GX	GEAR,INTERNAL PLANETARY,TRANSFER CASE	1
27	PAFZZ	45152	7910GX	GEAR,SPUR TRANSFER CASE	1
28	PAFZZ	52304	1468	RING,RETAINING TRANSFER CASE	1
29	PFFZZ	45152	432-A-1	NUT,PLAIN,HEXAGON TRANSFER CASE	24
30	PAFZZ	45152	1597FX	STUD,PLAIN TRANSFER CASE HOUSING	24
31	PAFZZ	45152	318B	WASHER,LOCK TRANSFER CASE	24
32	PAFZZ	45152	64876DX	COVER,ACCESS TRANSFER CASE	1
33	PAFZZ	45152	501B02	SCREW,CAP HEAD,DECLUTCH HOUSING	8

Current part is item (30,6) on diagram. Available at www.oshkoshequipment.com